MULTI ELECTRIC
OCEM AIRFIELD
A company of ARETÈ COCCHI TECHNOLOGY

LED INSET STOP BAR LIGHT

LTWS

LED, Runway & Apron

Original Instructions (EN)

Operation and Maintenance Manual

LTWS04-UM_EN(1.0)

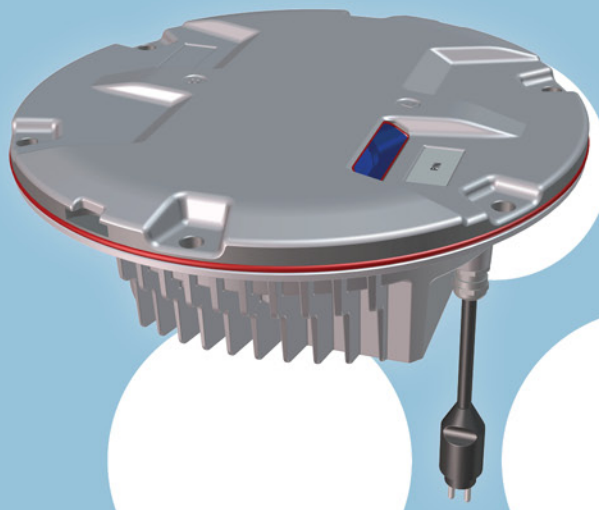

Intertek

Multi Electric Mfg., Inc.
10501 Franklin Avenue - Suite 400
Franklin Park, IL 60131 (USA)

Email: sales@multielectric.com
Phone: +1 773-722-1900 | Fax: +1 773-722-5694

Date	Index	Description	Edited by	Approved by
24-07-2013	0.1	First issue		
11-03-2014	0.3	New address		
17-12-2018	0.5	Added spare parts		
21-10-2024	1.0	New edition		GGIUS

LTWS04-UM_1.0_21-10-2024 (EN) | These specifications may be subject to change.

Copyright © 2013-2025 Multi Electric Mfg., Inc. (USA) | All rights reserved.

Multi Electric Mfg., Inc., and any other name/brand associated with products Multi Electric Mfg., Inc. mentioned or indicated in this document, are trademarks or registered by Multi Electric Mfg., Inc.. The rights of third parties on each registered trade mark mentioned in this document are the property of their respective owners.

The copyrights of this manual are the property of Multi Electric Mfg., Inc.. The instructions, drawings, tables and other contained in this manual are of a reserved technical nature and cannot be reproduced and/or disclosed, whether in full or in part, without prior authorization of the Manufacturer. The reproduction of this manual is allowed for the sole purpose of making one backup copy. Multi Electric Mfg., Inc. reserves, under the law, the property of this manual, by prohibiting the transfer to third parties and/or the unauthorised reproduction.

LTWS
INDEX OF CONTENTS

1 GENERAL INFORMATION

1.1 LTWS overview 7
Figure 1 - Fixture general view
1.2 Manual reference guide 8
1.2.1 Copyright 8
1.2.2 Document reviews 9
1.2.3 Preservation of the manual 9
1.3 Safety instructions 10
1.4 Safety symbols 11
1.5 Definition of operator 11
1.6 Limited warranty 12
1.7 Confidentiality, industrial property rights 12
1.8 Article identification 13
1.9 ETL verified lable 13
1.10 Disposal 13
1.11 Photo-biological risk 13

2 FIXTURE DESCRIPTION

2.1 General information 15
2.2 Complete part number Identification 15
2.3 Removable light unit 15
Figure 2 - Exploded view (LTWS threshold on the left, LTWS threshold wing bar on the right)
2.3.1 Dome 17
Figure 3 - 12” Dome outside view
2.3.2 Optical Assembly 18
Figure 4 - Optical assembly
2.3.3 Power Supply/Control Board 19
Figure 5 - Lower cover (inside view)
Figure 6 - Wiring diagram
2.3.4 Lower Cover 20
Figure 7 - Lower cover (outside view)
2.4 Shallow base 21
Figure 8 - Lower cover (inside view)
2.5 Electronic section 22
2.5.1 Current/current conversion circuit (patented) 22
2.5.2 LED command circuit 22
2.5.3 Control circuit 22
2.6 Monitoring device 23
2.7 Arctic kit 23

3 INSTALLATION

3.1 Pavement boring and sawcutting 25
Figure 9 - Pavement boring, sawcutting and joint intersection details
Figure 10 - Example of light unit configuration
3.1.1 Scheme of Light Configurations 26
3.2 Installing the shallow base 27
Figure 11 - Gasket for 12" shallow base
Figure 12 - 12" shallow base for side or bottom ducts (Method "B")
Figure 13 - 12" shallow base installation details
Figure 14 - Optical device (refer to the dedicated manual for further information)
3.3 Installing the light unit on L-868 base (size B) 31
Figure 13 - Gasket for L-868 base
3.4 Secondary wiring 32

4 MAINTENANCE

4.1 Maintenance program 33
4.1.1 Periodical Checks 33
4.1.2 Snowplow Operations 33
4.2 Removing and opening the light unit from the base 34
4.2.1 Removing the fixture 34
4.2.2 Opening the fixture 34
4.2.3 Closing the fixture 34
Figure 14 - Lower cover fixing screws
4.2.4 Leakage test 35
4.2.5 Reinstalling the fixture 35
Figure 15 - Lower cover with pressure valve
Figure 16 - Fixture gasket
4.3 Prism cleaning 36
4.3.1 Prism outside cleaning 36
4.3.2 Prism inside cleaning 36
Figure 17 - Prism cleaning
4.4 Prism replacement 37
4.4.1 Removing the prism 37
4.4.2 Installing the New Prism 37
Figure 18 - Prism replacement
4.5 Led module replacement 38
Figure 19 - LED module replacement
4.6 Electronics replacement 39
4.7 Arctic kit replacement 39
4.7.1 Thermostat 39
4.7.2 Heater 39
Figure 20 - Wiring diagram for the heaters
4.8 Gaskets 40
4.8.1 Gasket examination 40
Figure 21 - Fixture gasket
Figure 22 - Prism replacement
4.8.2 O-Ring replacement 41
4.8.3 Tightening torque 41
Figure 23 - Tightening elements

4.9 Cable lead with plug 42
4.9.1 Removing the cable lead with plug 42
4.9.2 Installing the new cable lead with plug 42
Figure 24 - Cable lead with plug
4.10 Pressure valve 43
4.11 Cleaning 43
Figure 25 - Lower cover with pressure valve
4.12 Monitoring 44
Figure 26 - Restoring the monitoring device

5 TROUBLESHOOTING

6 SPARE PARTS

Page left intentionally blank

1 GENERAL INFORMATION

1.1 LTWS overview

LTWS inset LED stop bar light is medium intensity, unidirectional, 12” steady burning type.

These fixtures are intended for use as stop bar, in order to provide a visual aid to the moving aircraft.

LTWS lights are in compliance with FAA AC 150/5345-46(Style 3).

The fixtures described in this manual are designed to be connected to series circuit, replacing those equipped with incandescent lamps, fed through standard isolation transformers connected to CCR with variable current from 2.8 A to 6.6 A.

Location of these fittings shall be in compliance with FAA.

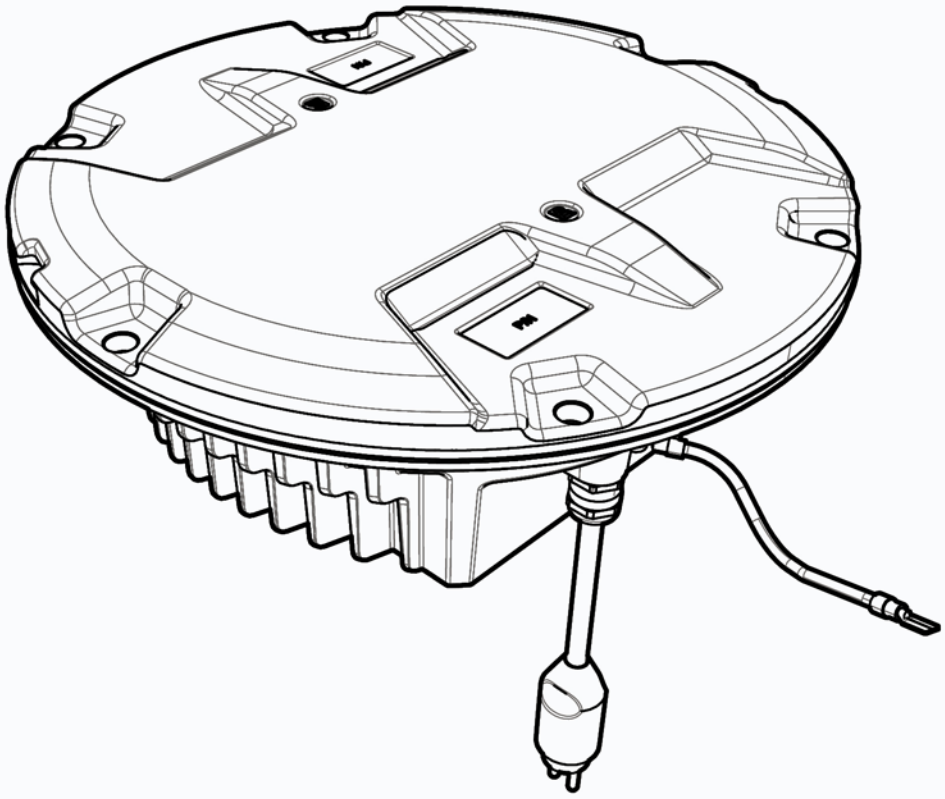

Figure 1 - Fixture general view

1.2 Manual reference guide

This document contains all the information related to the equipment and describes the procedures to follow during the installation of the product and during ordinary maintenance. The document is indented for all operators that must intervene on the equipment.

This document does not replace in any manner applicable laws, rules or regulations, included the standards FAA and ICAO.

The precautions provided in the manual are always preceded by a symbol as illustrated below:

	**Indicates the warnings, the notes, the suggestions and other points on which is intended to draw the attention of the reader.**
	**Indicates the operations to be carried out mandatorily or the information which should be carefully read to avoid possible risks.**
	**Indicates particular risks connected with the power supply. It reports the operations to be carried out mandatorily or the information which should be carefully read to avoid possible risks.**

These precautions safeguard the personal security of everyone who work on and/or are in proximity of the equipment and of the relative supply circuits.

The failure to comply with the instructions (in particular those preceded by danger, warning, caution precautions) can cause serious injury or death.

1.2.1 Copyright

The copyright of this manual belongs to Multi Electric Mfg., Inc.. All sensitive contents distributed through this document are confidential, and may not be reproduced and/or disclosed in whole or in part without specific authorization.

1.2.2 Document reviews

In the event of changes to the equipment, whereby this document and/or its annexes need to be updated, the Manufacturer will provide a new copy of the technical documentation on a suitable support.
The Manufacturer also reserves the right to:

- change, at any moment, the contents of this documentation;
- update the documentary project specifications and to improve the equipment performances without the obligation to communicate such changes;
- upgrade the equipment already installed and update the relevant documentations, issuing a new revision of the document and disseminating it to its Customers on a suitable support.

Any further documentation, relevant to the safety of operators and/or of the equipment, should be preserved together with the manual and considered an integral part of the technical documentation.

1.2.3 Preservation of the manual

The management and storage of technical documentation is the responsibility of the Customer. This manual must be kept in good condition and completely legible in all its parts. In addition, the operator as well as the persons who carry out maintenance, adjustments must know where it is located and be able to consult it at all times. Should the manual get lost or become illegible, ask the Manufacturer for a copy.

1.3 Safety instructions



CAREFULLY READ THIS DOCUMENT.
The improper use of the equipment or the failure to comply all the precautions indicated implies life danger and serious injury to persons and damages to things.



HAZARD OF ELECTRICAL SHOCK, EXPLOSION OR ELECTRIC ARC
Carefully read the enclosed documentation before installing or starting to use the equipment. Do not install the equipment until the completion of all construction works required to carry out the work.

Always proceed with the utmost attention. Safe intervention procedures indicated aim to protect the operator against possible risks and to preserve the fixture from any damages.



SAFE INTERVENTION ON THE FIXTURE POWERED BY SERIES CIRCUIT
Operate in this way:
- **Switch off the constant current regulator**
- **Disconnect the supply plug from the related socket of the secondary of the isolation transformer**
- **Disconnect the plug of the monitoring circuit (if present) from the related socket of the secondary of the dedicated isolation transformer**

Carry out all the operations on the fixture and complete the intervention. At the end, proceed to restore the operating condition:
- **Reconnect the supply plug to related socket of the secondary of the isolation transformer**
- **Reconnect the plug of the monitoring circuit (if present) to the related socket of the secondary of the dedicated isolation transformer**
- **Restart the constant current regulator**



RESIDUAL ENERGIES
Always wait for the discharging time (at least 5 min) before operating on the equipments. Check the complete de-energization of the equipments before accessing the potentially active parts. The failure to comply all the precautions indicated implies life danger and serious injury to persons.



GROUND CONNECTION
The body/envelope of the fixture must be connected to the earth potential before the commissioning of the fixture.
Check that the protective conductor yellow-green is connected to the terminal predisposed on the fixture.
In case of isolation transformer with secondary ground connected it is advisable to ground connect the fixture at the point where the secondary of the dedicated isolation transformer is connected to the ground.



IN CASE OF MALFUNCTION OF THE EQUIPMENTS
Do not leave the devices who have expressed evidence of deterioration or of malfunction. Disconnect the energy sources and proceed as soon as possible to repair/replacement of devices.



DO NOT OPERATE ON POWERED CIRCUITS
Do not carry out any operation on powered circuits.
Before every access, inspection or intervention on the equipment, ensure to have switched off the equipment by opening the main power switch and by removing the supply from the unit (open the power switch at the beginning of the line or switch off the constant current regulator).
The failure to comply all the precautions indicated implies life danger and serious injury to persons.

1.4 Safety symbols

The symbols illustrated in the following table are used in the user and maintenance manual and on the device. These symbols indicate the existence of any dangerous situations, to indicate obligations and prohibitions in relation to the situations that may represent an hazard for the operator or indicate the behavior to adopt to minimize the risk for the operator.

Warning signs	
	W001 | General warning sign
	W004 | Laser beam
	W005 | Non-ionizing radiation
	W006 | Magnetic field
	W012 | Electricity
	W017 | Hot surface
	W027 | Optical radiation

Prohibition and obligation signs	
	P001 | General prohibition sign
	M001 | General mandatory sign
	M002 | Refer to instruction manual/booklet
	M005 | Connect an earth terminal to the ground
	M009 | Wear protective gloves
	M015 | Wear high visibility clothing
	M021 | Disconnect before carrying out maintenance or repair

1.5 Definition of operator

All operations on devices and on its internal parts must be performed by professional staff, properly formed and aware of the risks connected with the power supply and to the use of low and high voltage circuits.



Take all the precautions in compliance with the safety standards for the work carried out on electrical installations and however for the works carried out using electrical installations or in buffer zones of the installations and of the electrical devices.

All operations on equipments and on its internal parts must be performed by professional staff, properly trained for Cardio Pulmonary Resuscitation (CPR) techniques.



Never operate on devices if there is not at least another operator properly trained for CPR techniques.

Check that Operators do not operate outside their own specific fields of competence and responsibility. Multi Electric Mfg., Inc. declines any and all liability arising from wrong operations carried out by untrained personnel in the use of the devices, or deriving from the non-compliance of general safety standards.

1.6 Limited warranty

The following warranty is exclusive and in lieu of all other warranties, expressed, implied, or statutory, including, but not by the way of limitation, any warranty of merchantability or fitness of purpose

Multi Electric Mfg., Inc. (the Company) warrants the LED based products manufactured by the Company, to be free of defects in materials and workmanship, for a period of (5) year from date of installation. The Company's sole liability is limited to either repair or replacement of defective material at the manufacturer's sole discretion. The manufacturer reserves the right to inspect or test at its facility, any product claimed to be defective during normal business hours.

The Purchaser making claim against warranty are responsible for the full cost associated with removal and replacement of defective materials, transportation of all materials along with other permits, fees and costs associated with the disruption of serve, restoration, replacement or repair of the product and facilities.

Material and Products not manufactured by Multi Electric Mfg., Inc. but supplied under the same contract or purchase order carry the original equipment manufacturers warranty.

Failures caused by improper handling, storage and transportation, Acts of God, Civil and Political conflict, accident, incursion with moving vehicles, tampering, or unauthorized modification are specifically excluded from coverage under this warranty agreement.

For more details on warranty conditions, please contact Multi Electric Mfg., Inc. sales office.

1.7 Confidentiality, industrial property rights

The Customer needs to adopt the maximum confidentiality with respect to all the information of technical nature (including, by way of example and not exhaustively, plans, programmes, documentation, formulas, scenarios, setting and correspondence) received by the Supplier or in any case assimilated or gained during the conclusion of the Contract of sale.

Any right regarding intellectual and industrial property connected to equipment and to any other element included in the supplied Goods as indicated in the Contract remain exclusive property of the Supplier.

1.8 Article identification

On each equipment there is an identification plate of the article, where the article code is reported; on the plate there are additional data: the name of the model, employments or use, power supply features, any trademarks and/or marks that attest the agreement of the equipment to specific regulations or legislations.

1.9 ETL verified lable

This equipment has been ETL verified and meets the criteria established by an independent certification program administrators. The user should carefully read this document and respect all the requirements quoted.

Performances and quality of this equipment have been successfully verified. This product bear the Intertek's ETL verification mark.

1.10 Disposal



At the end of use, the user must confer all the waste in suitable differentiated waste collection centres. It is the responsibility of the user the correct disposal of the equipment in accordance with an environmentally responsable disposal and with the respective national and federal regulations in force at the time of disposal. These equipments must never be disposed of in the household waste.

1.11 Photo-biological risk

The fixtures LTWS are designed and manufactured in compliance with current regulations, but if used unsafely or without precautions, the light emitted by the fixture, reaching even high levels of intensity, can be harmful not only to those who use the light fixture locally, but for anyone within the light beam range.

The optical radiation issued by the equipment does not present any particular photo-biological risks, however can be harmful.



Don't look directly inside the light source during high intensity operation. Wear appropriate personal protective equipment (goggles or similar protections).

Page left intentionally blank

2 FIXTURE DESCRIPTION

2.1 General information

Each light assembly consists of a removable fixture and a shallow base receptacle. The fixture is waterproof and designed to withstand aircraft impact and roll-over loads without damage.

Power consumption 17 VA.

2.2 Complete part number Identification

LTWS - M - A

Basic P/N:

Monitoring:
0 = Without Monitoring
M = With Monitoring

Arctic Kit:
0 = Without Arctic Kit
A = With Arctic Kit

2.3 Removable light unit

The removable fixture mainly consists of a dome, an optical assembly, a power supply / control board, and a lower cover.



For further information about the fixture, please see the following exploded-view drawing.



Always check the version of the fixture to be installed and any accessories supplied.
Each change and/or tampering made to the product immediately terminates the warranty.

To minimize operations, always pay the greatest attention to handling and storage of devices and carry out installation procedures with extreme precision.



Before carrying out any intervention on the device, cut off all external power sources and place appropriate work-in-progress warnings on the systems.
Wait for the discharging time (at least 5 min) and check using appropriate instruments that there are no residual energies before accessing the electrical equipment.

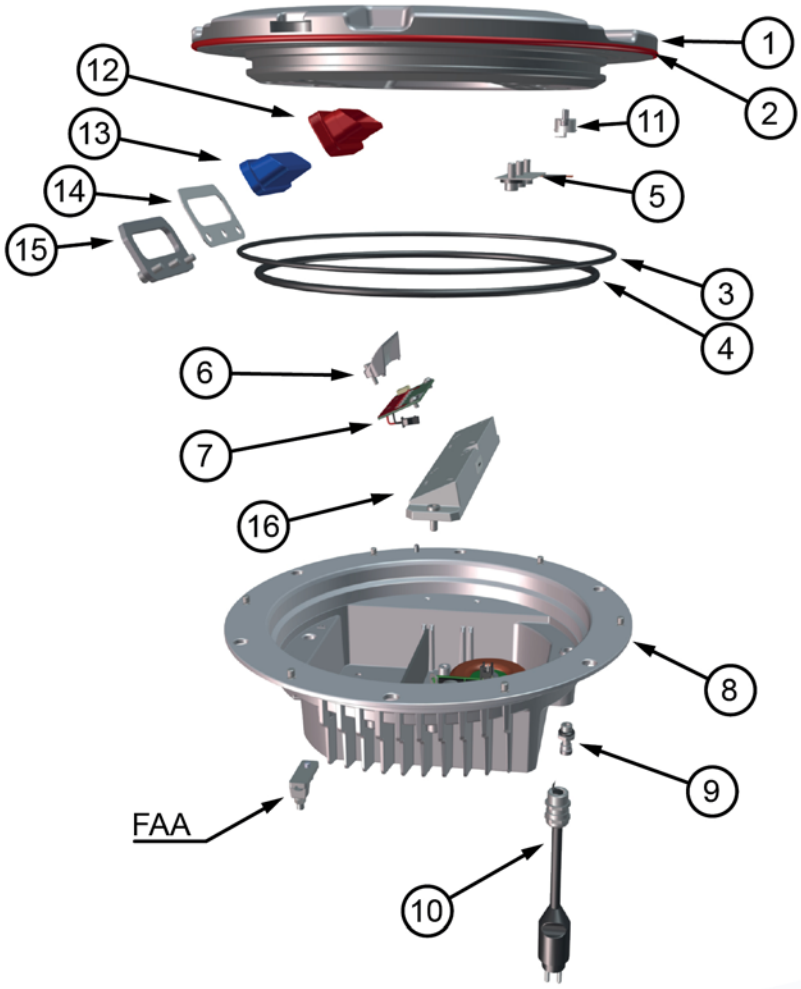

Figure 2 - Exploded view (LTWS threshold on the left, LTWS threshold wing bar on the right)

No.	Description	Q.ty
1	Dome	1
2	O-Ring for dome (external)	1
3	O-Ring for dome (internal)	1
4	O-Ring for lower cover	1
5	Arctic Kit heater	1
6	Reflector with hardware	1
7	LED module with accessories	1
8	Lower cover	1
9	Valve for watertightness test	1
10	FAA L-823 plug	1
11	Arctic Kit thermostat	1
12	Prism gasket	1
13	Prism	1
14	Prism holder gasket	1
15	Mounting plate	1
16	LED module support with hardware	1

2.3.1 Dome

The **dome** (1) is made of treated drop-forged aluminium and includes two windows to seat the prisms, complete with gaskets, kept in the proper position by means of a mounting plate fixed with HSCS M5x12 screws. In correspondence of the windows, the dome is outside provided with identification letters “A” and “B” (3).

The dome is provided with six through holes for fastening the light unit to the base.

It is also provided with two suitable slots (2), in opposite position, to make easy the fixture removal by using two suitable lifting tools (available on request, P/N 332.4140 or 332.4230). As alternative, two screwdrivers can be used.

A silicone O-Ring (separately supplied) has to be mounted outside around the dome, to avoid dirt deposits between dome and shallow base.

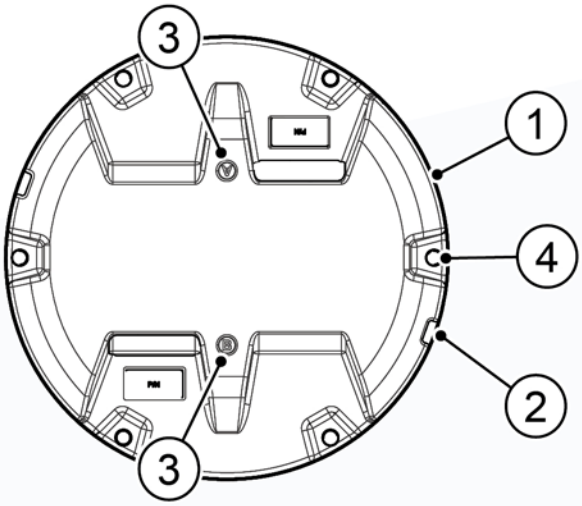

1) Dome
2) Slot for dome removal
3) Letter to identify the beam
4) Trough hole for light unit fastening

Figure 3 - 12” Dome outside view

2.3.2 Optical Assembly

The **optical assembly** consists of one prism (3) with relevant gasket (2) kept into the proper position by mounting plate (5) and one LED module (6) with reflector (7).

LED module consists of six LEDs mounted on a metal core PCB, coupled with the support through thermo conductive material; the reflector is fixed to the support assembly.

All the optical assembly parts are factory assembled; they may be field-replaced if necessary..

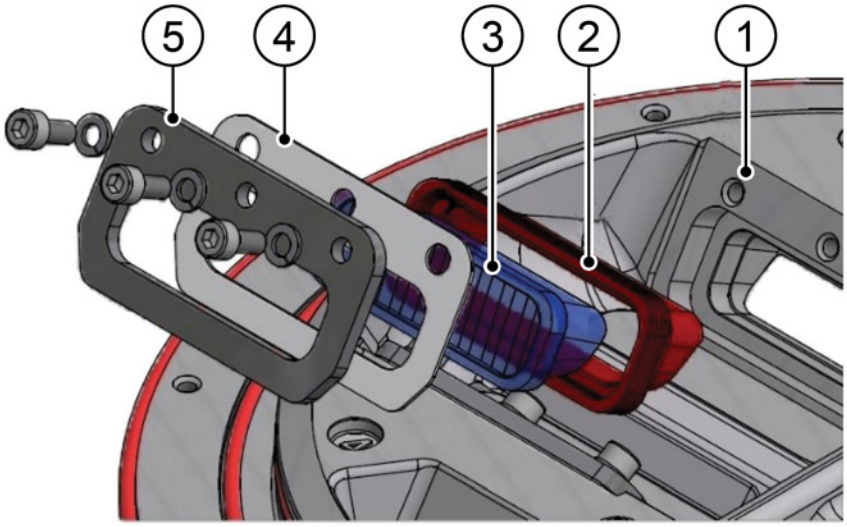

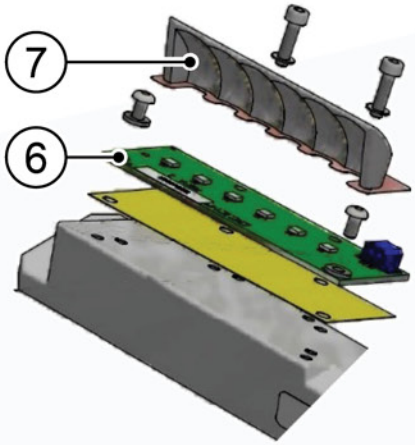

1) Dome
2) Prism gasket
3) Prism
4) Prism holder gasket
5) Mounting plate
6) LED module
7) Reflector

Figure 4 - Optical assembly

2.3.3 Power Supply/Control Board

The **power supply/control board** (1) is encapsulated into waterproof and heat conductive silicon resin.

The PCB powers and controls the LEDs so that the light output provided at every current step from 2.8 A to 6.6 A is comparable to a traditional halogen lamp, according to the requirements of FAA “Engineering Brief N°67” document.

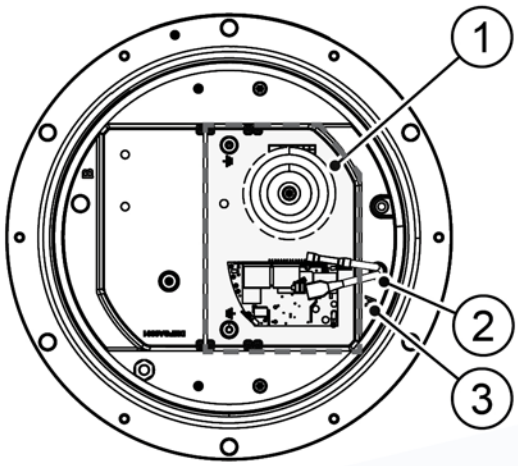

1) Power supply/control board
2) Cable lead with plug
3) Letter for cable identification

Figure 5 - Lower cover (inside view)

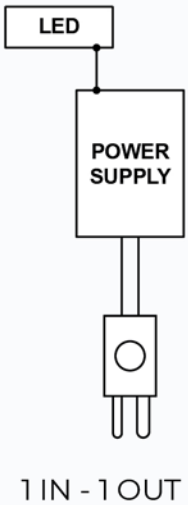

1 IN - 1 OUT

Figure 6 - Wiring diagram

2.3.4 Lower Cover

The **lower cover** consists of a treated aluminium casting (1); it is fastened to the dome by means of six screws TORX SFH M5x10. Two O-Ring are provided between dome and lower cover. The dome is equipped with a reference pin for its proper positioning.

The cover is provided with one threaded hole for cable entry (5) and external grounding screw (3) with XHHW, 600V, AWG12 cable, 0.50 m long, (with male faston terminal) or ground clamp for AWG 6, XHHW, 600 V cable. A suitable valve (6) is outside mounted for the leakage test.

Watertightness between fixture and shallow base is ensured by means of an O-Ring (separately supplied) to be placed on the relevant shallow base groove.

The fixture is supplied with one **cable lead with L-823 plug Style 1**; external length 0.460 m long. The plug is in compliance with FAA AC 150/5345-26 for very quick coupling with the receptacle mounted on the shallow base.

The fixture is 304 mm in diameter and 107 mm (+18.5 mm for plugs) high; the protrusion above the ground is less than 6.35 mm.

An identification data label (2) is externally applied over the lower cover. Moreover, to identify quickly the beam color, the letter “A” of the dome in front of the window is painted (4) in the same color of the light beam.

The same color painting is provided outside on the lower cover.

See “*Complete part number identification*” for P/N information.

All hardware is made of stainless steel.

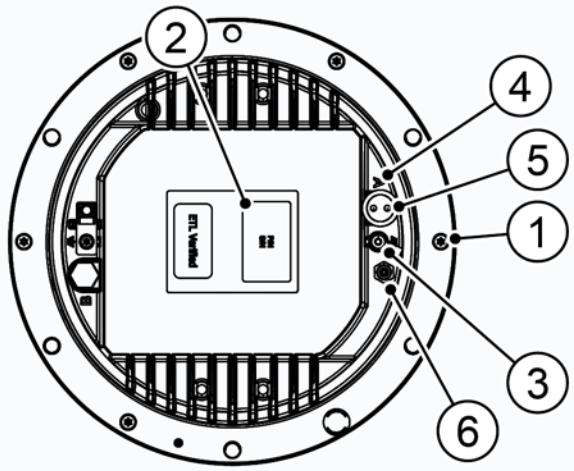

1) Lower cover
2) Identification label
3) Grounding cable hole
4) Letter for cable lead identification
5) Cable lead entry
6) Leak test valve

Figure 7 - Lower cover (outside view)

2.4 Shallow base

The shallow base consists of a treated aluminium casting containing an electrical feed-thru system to connect the power cables, consisting of one cable lead with receptacle incoming inside the base through one cable gland. The cable lead with receptacle consists of two single-pole leads, size 2.5 mm², 1.00 m long, with FAA L-823 receptacle.

The letters “A” and “B” are printed inside the base for cable leads identification.

The base is equipped with an internal grounding screw with XHHW, 600 V, AWG 12 cable lead, 0.25 m long, with female faston terminal for quick connection to the corresponding of the fixture. An additional external grounding screw is provided close to the cable entry.

The shallow base is designed for cementing in place by means of epoxy-resin in a hole drilled in the pavement.

The fixture has to be fastened to the base by means of six M10x30 stainless steel hex cap screws. If the base has American threaded holes, UNC 3/8-16 screws can be used. Each locking screw is complete with external silicone-coated lock-washer.

A gasket (separately supplied) must be placed between base and fixture for watertightness placed in the relevant shallow base groove.

The 12” shallow base is 320 mm in diameter and 150 mm high.

On request, special bases without cable leads can be supplied, provided with holes suitable for conduit connections.

Inside the base two suitable holders (7) are provided to properly sustain the secondary power cable, in case of this cable is inside incoming through a conduit.

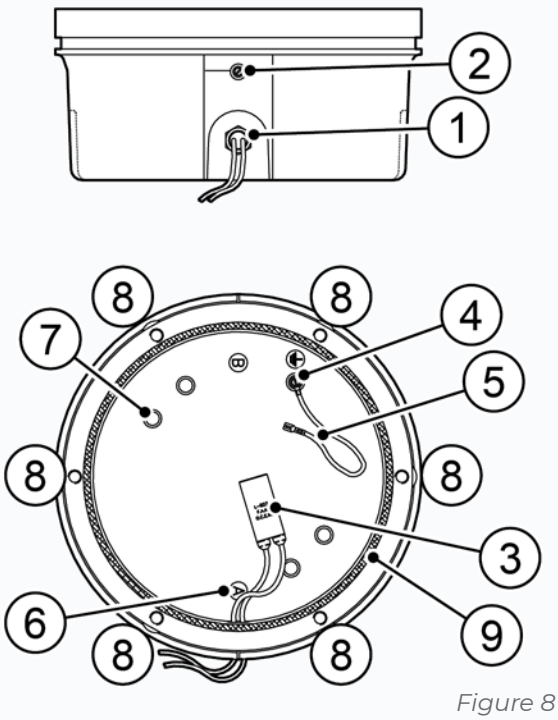

1) Cable gland for cable entry
2) External grounding screw
3) Cable leads with socket
4) Internal grounding screw
5) Grounding cable with female faston terminal
6) Letters “A” for cable lead identification
7) Power cable holders
8) Threaded holes for fixture fastening by bolts
9) O-Ring between fixture and base

Figure 8 - Lower cover (inside view)

2.5 Electronic section

The electronic section consists of the following circuits:

- Current / current conversion circuit.
- LED command circuit.
- Control circuit.

2.5.1 Current/current conversion circuit (patented)

This electronic section provide a conversion from the input current value (within range from 2.8 A to 6.6 A) to the specified LED current value.

This conversion, performed in one transformation only, allows to achieve several benefits:

- Minimize the power losses.
- Significant increase of efficiency.
- High input power factor.
- Independent form the CCR topology: the CCR may have any output current waveform.
- No percentage of load dependent: the CCR can feed without any problem also few lights in the series circuit.
- Isolation transformers of smaller size can be used, respect to those used with the equivalent fixtures equipped with halogen lamps.

The input circuit is protected against over-voltage, tested in accordance with the requirements in FAA “Engineering Brief N°67” document.

2.5.2 LED command circuit

A PWM technique is used to command the LEDs. As known LEDs need to be supplied with a constant current; therefore in order to vary the luminous emission with a proper linearity is necessary the supply current will be applied at impulses. In other words, the LED luminous output depends on the time of application (duty-cycle) of constant current impulses.

2.5.3 Control circuit

The main task of the control circuit is to assure the correct LED light emission according to the series circuit current. To perform this features, the circuit is provided with a current sensor that generate a signal proportional to the series circuit current.

This signal is analyzed by a DSP which perform a RMS conversion of the input current. The RMS conversion give a good accuracy with any input current waveform.

Other functions:

- Diagnostic, auxiliary voltage control and LED status control. In case of any LED failure or relative power supply circuit failure, the electronic control circuit commands the intervention of the monitoring device so that the secondary side of the isolation transformer becomes open, like in the case of an incandescent lamp failure. **This features is essential when the monitoring option is required.**
- Events recording (not-volatile memory) for diagnostic purposes.
- PC operator interface through serial connection: this features allows to calibrate the brightness depending on the current, to modify the emission curve, to read the events occurred during the operating time.

2.6 Monitoring device

The optional monitoring device, should the light is in fault or failure, promptly returns the open circuit (fail-open) information to the secondary circuit of the isolation transformer.

Monitoring option with integrated fail-open system allows the fixture complete integration with any airport's existing ALCMS/ILCMS.

2.7 Arctic kit

The optional arctic kit is in compliance with FAA "Engineering Brief N°67" document and it prevents from the ice over the prisms area.

The arctic kit is connected in series to the PCB and it is consists of a thermostat (two in case of fixture with double cable lead) and one or two heaters. It starts when the dome temperature is less than about -1° C and turns-off when the dome temperature reaches about 10° C.

Arctic kit consumption is less than 40 VA per plug.

Page left intentionally blank

3 INSTALLATION

3.1 Pavement boring and sawcutting

Drill each recess in pavement following the instruction.

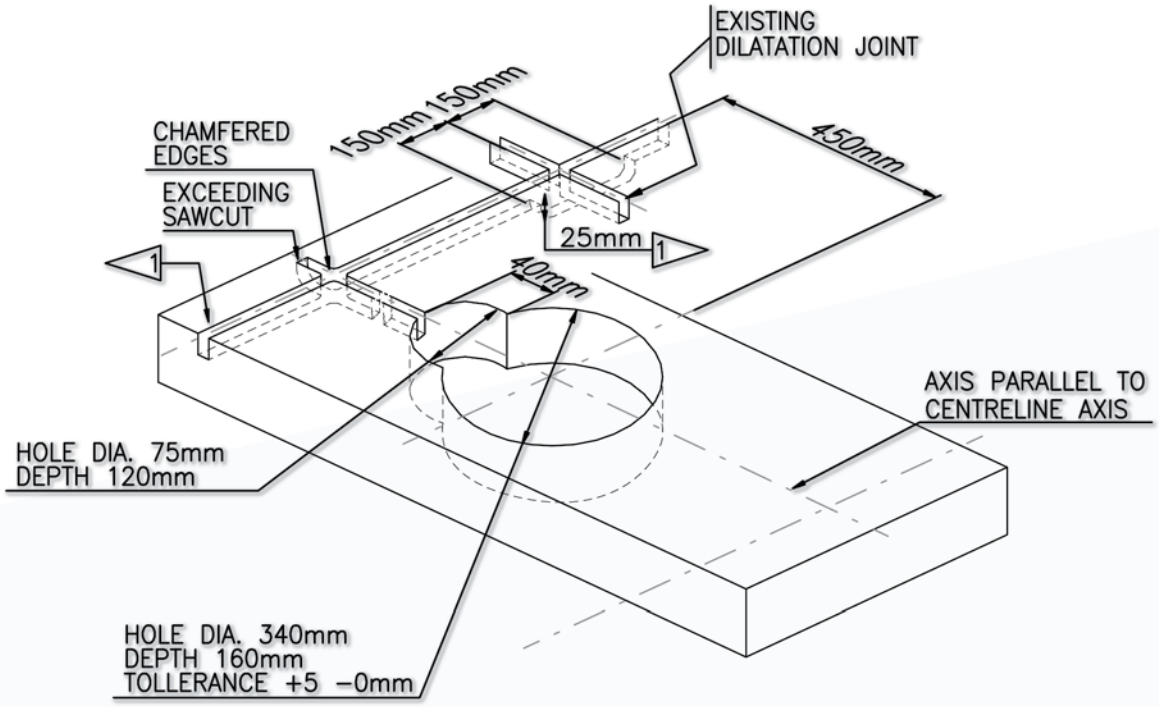

Figure 9 - Pavement boring, sawcutting and joint intersection details

Make sure the recess size and depth are maintained within the specified limits. All surfaces of the recess must be clean and dry. If any of these surfaces is damp, it is desirable that it be dried and blown clean with a compressed air blast. The recess side walls must be perpendicular to the pavement surface. The bottom surface must be flat or slightly concave to assure that the shallow base rest securely and in true position. The recess can best be drilled using a diamond-faced core drill in a sturdy, stable drill rig.

Mark on the pavement surface the aiming direction of the light by chalk, nails or other devices.

3.1.1 Scheme of Light Configurations

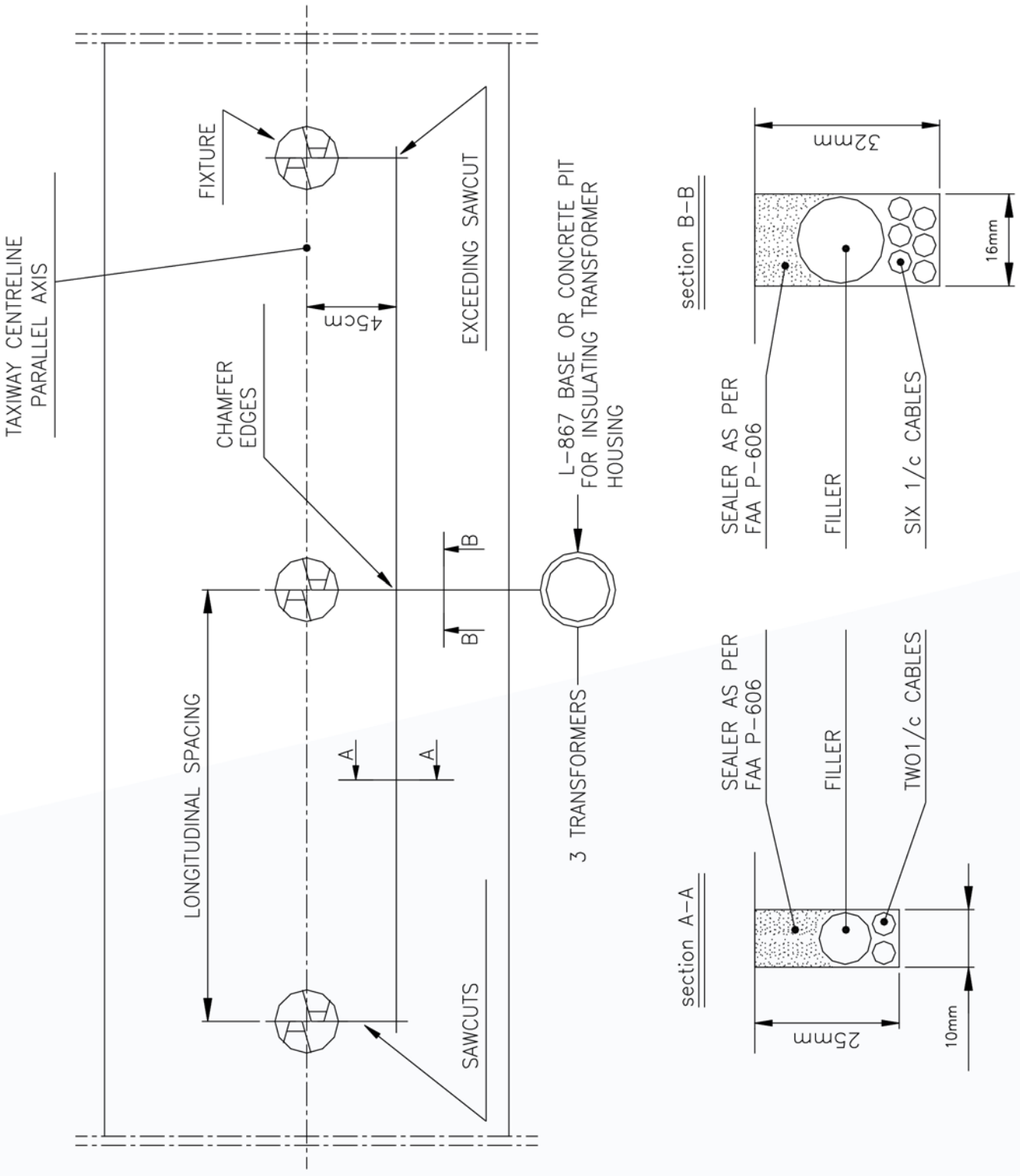

Figure 10 - Example of light unit configuration

3.2 Installing the shallow base

Two different installations are possible:
- Method “A” – cable leads to be laid in wireways
- Method “B” – cable leads to be laid in cable ducts

Proceed as follow (**V**: to do; **X**: not to do) to realize a proper installation.

STEP	A	B	Activity description
1	V	V	Take the base from the shipping box.
2	V	V	To assure an adequate bond between base and hole all external surfaces of the base should be sandblasted and must be cleaned with solvent. **TAKE CARE NOT TO DAMAGE THE ELECTRICAL SYSTEM.**
3	V	X	Connect an insulated G/Y grounding wire of suitable length to the grounding screw externally provided on the wall of the base.
4	V	X	Splice the light base leads to the power cables using solderless squeeze connectors, as shown in the figure, crimped with the proper tool. Connect also the grounding wire to the main grounding network by using a suitable clamping lug. 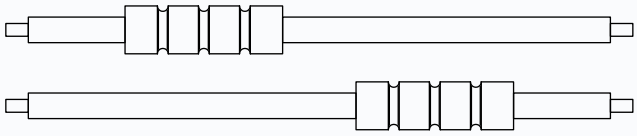 **ATTENTION: Insulate each splice carefully using either heat shrinkable insulating tubing properly applied or at least three layers of plastic electrical insulating tape applied with half overlap.**
5	V	V	Mount the positioning jig (4) (P/N 332.4301) on the base as shown in figure. **An optical device (13) for proper fixture orientation is available (P/N 332.4351).**
6	V	X	Properly arrange the leads in the wireways using small pieces of insulating tape if necessary.
7	V	V	Completely cover the bottom of the base with sealer material, apply a thin coat of sealer to the bottom of the drilled hole to assure a bond between the bottom of the light base and the drilled hole. It may be necessary to place temporary plugs so as to block the wireways entrances into the drilled hole (METHOD “A”) or the cable ducts entrance (METHOD “B”). The plugs will retain the sealer while it begins to dry up. **ATTENTION: avoid starting the installation when the ambient temperature is below 10°C (86°F), unless the sealer used is designed to dry up at a lower temperature.**

STEP	A	B	Activity description
8	V	V	Push the base into the recess until its upper side is at the level of the pavement surface; take care no sealer flowing inside the base. Align the notch of the base with the markings on the pavement surface.
9	V	X	Observing the circular level (6) fixed on the jig, level the jig by operating the three leveling lobe knobs (8). If necessary, a weight may be placed on the jig to hold the light base in position. The remainder of the space between the sides of the shallow base and the drilled hole should be filled with sealer up to approx 25 mm from the pavement, according to the local needs. Fill the remaining 25 mm with a suitable joint sealing filler.
10	X	V	Observing the circular level (6) fixed on the jig, level the jig by operating the three leveling lobe knobs (8). If necessary, a weight may be placed on the jig to hold the light base in position. When the shallow base is in its final position, the conduit(s) must be properly jointed to the hole(s) provided on the shallow base. This(these) hole(s) can be provided either on the wall either on the bottom, the number and the dimensions according to customer requirements as shown in figure. The remainder of the space between the sides of the shallow base and the drilled hole should be filled with sealer up to approx 25 mm from the pavement, according to the local needs. Fill the remaining 25 mm with a suitable joint sealing filler.
11	X	V	Lay the secondary power cable, equipped with a suitable two-pole receptacle kit, and the grounding wire inside the cable duct.
12	V	V	To install the fixture place the O-Ring around the dome (1) and between fixture and base (3). Connect the plug and the grounding wire of the fixture with the receptacle and the grounding wire of the base; press the fixture by hand onto the base and secure it using the six locking screws complete with washer, one drop of screw paste (e.g. Dow Corning Molycote 1000) should be applied to the screws before installation. Tightening torque is 35 Nm. **ATTENTION: The fixture is subject to mechanical damage and/ or optical misalignment if not properly seated on the base flange.**

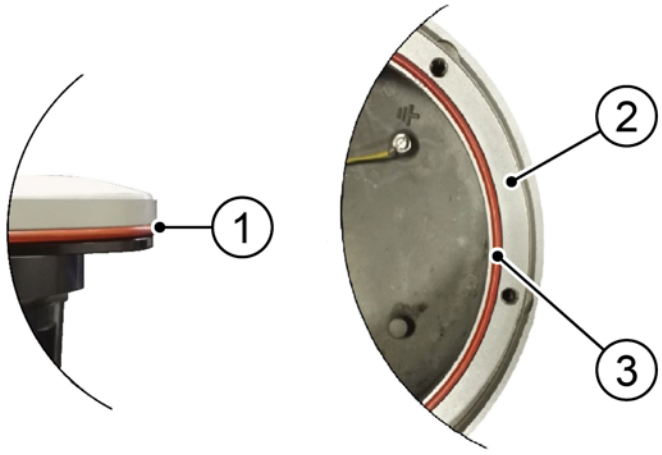

1) O-Ring around the dome
2) 12” shallow base
3) O-Ring between fixture and base

Figure 11 - Gasket for 12” shallow base

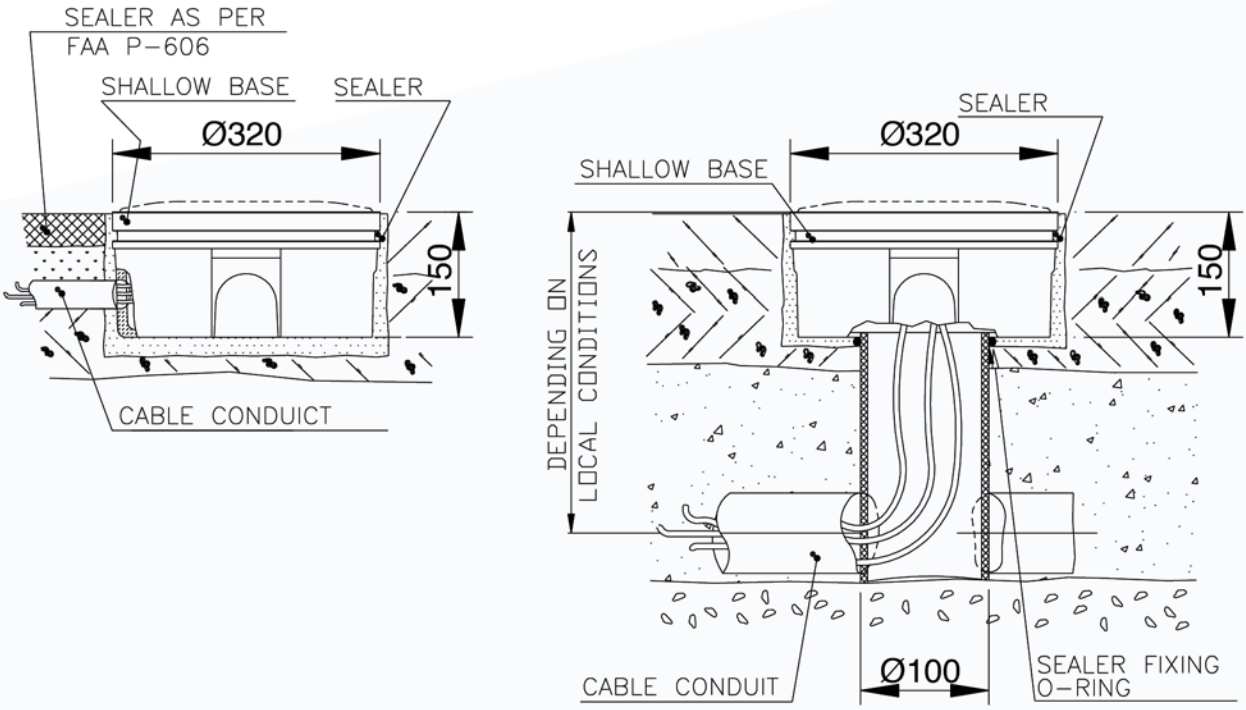

Figure 12 - 12” shallow base for side or bottom ducts (Method “B”)

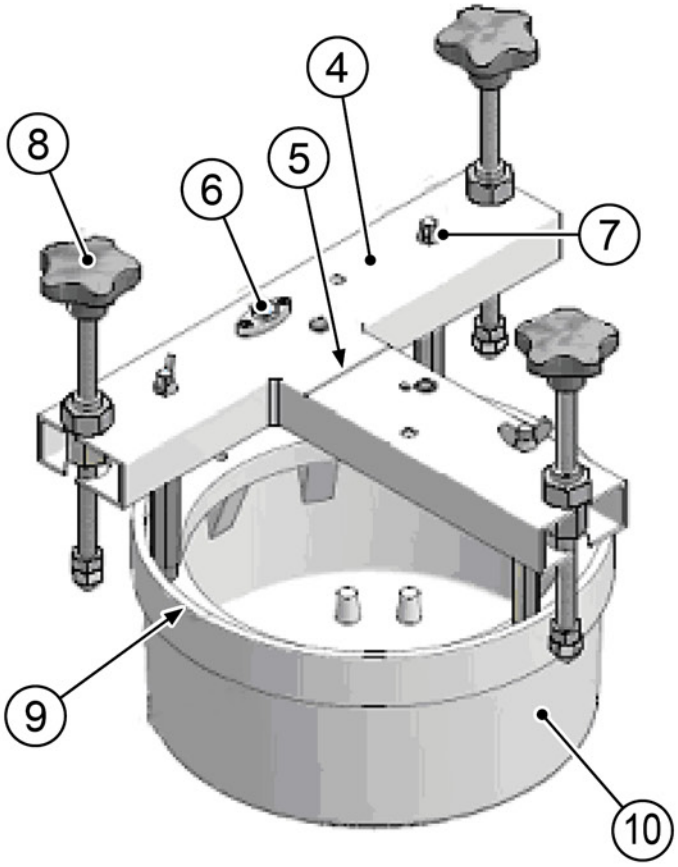

4) Positioning jig
5) Align the jig notch with the mark on the pavement
6) Circular level
7) Screws and spacers for the jig mounting
8) Lobe knob for positioning jig levelling
9) Shallow base notches aligned with the notch on the jig
10) 12” shallow base

Figure 13 - 12” shallow base installation details

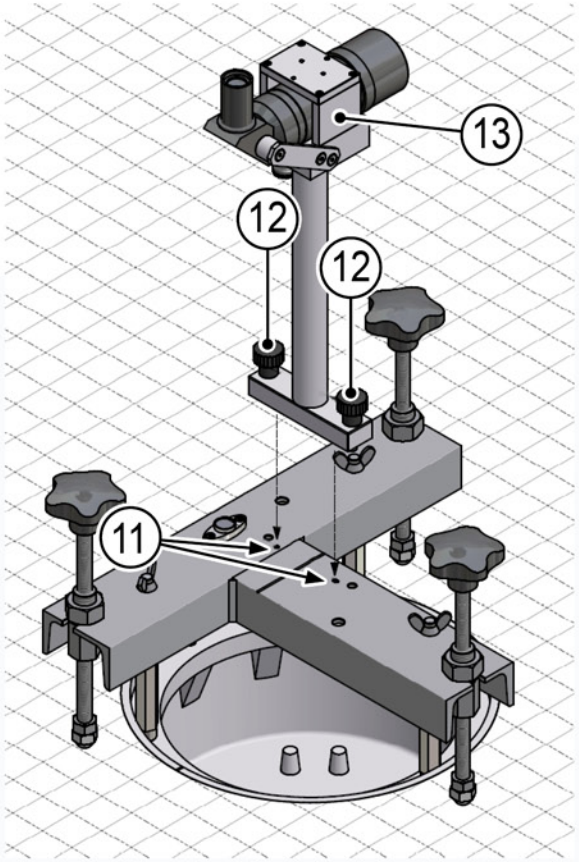

11) Positioning jig holes for optical device reference pin
12) Fixing knobs
13) Optical device for fixture orientation

Figure 14 - Optical device (refer to the dedicated manual for further information)

3.3 Installing the light unit on L-868 base (size B)

Install L-868 light base in compliance with FAA AC 150/5340-30.

The fixture is shipped complete (including the lamps) and is ready for installation as received, in case of 8" fixture it shall be complete of adaptor ring.

Be sure the flange on the transformer housing is clean and the O-Ring (2), if used, is in place in the O-Ring groove.

Connect the plug of the fixture to the receptacle of the isolating transformer inside the deep base. Connect the grounding wire of the fixture to the grounding wire of the deep base (faston connection). Then press the fixture firmly and evenly by hand onto the base flange. Secure the fixture to the base by using the six locking screws complete with washers, supplied with the base. One drop of anaerobic adhesive, medium type (e.g. Loctite 243) should be applied to the screws before installation; tightening torque is 25 Nm.

The fixture is subject to optical misalignment and/or mechanical damage if not properly seated.

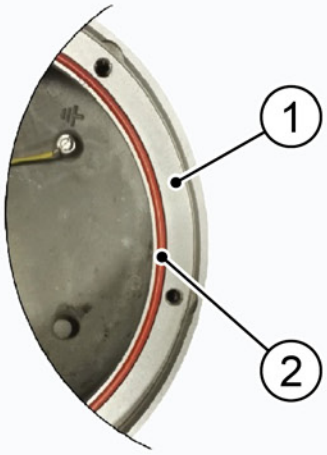

1) L-868 base
2) O-Ring between fixture and base

Figure 13 - Gasket for L-868 base

3.4 Secondary wiring

The IEC 61823 International Standard (AGL series transformers) states at para. 4.6 that *"if an earthing connection is provided, it shall be connected to the larger socket of the transformer secondary connector."*

This means that, when a fixture is directly connected to the relevant isolation transformer (provided with earthing connection), the fixture secondary side is wired to the grounding network through the larger pin of fixture plug.

In case of an inset fixture, installed in the taxiway/runway pavement on its shallow base far from the relevant isolation transformer, it is necessary to provide a secondary extension between fixture and transformer. To help the installer to identify the larger socket of the female connector inside the base (when installed), the base secondary cable leads are identified by a color code: the grey wire is wired to the larger socket, the black wire to the other one. In this way it will be easy to assure the earthing wiring, above described, between the larger socket of the transformer secondary connector and the larger pin of the fixture plug.

4 MAINTENANCE

Before any maintenance intervention, make sure the power supply be switched off.
DO NOT OPERATE ON LIVE PARTS!!!

LED lighting fixtures do not require frequent maintenance. With well-run installations and handling fixture carefully, avoiding excessive falls or collisions, the only maintenance work to be carried out on the field is to clean the prisms.

4.1 Maintenance program

In order to ensure maximum light fixture life, the installed units should be subject to a maintenance program in accordance with the following instructions and taking as reference the Airport Service Manual ICAO - Part 9 - Airport Maintenance Practices or FAA AC 150/5340-30.

4.1.1 Periodical Checks

Weekly	Cleaning of the prisms and the light output channel of runway fixtures
Bi-monthly	Cleaning of the prisms and the light output channel of taxiway fixtures
Annually	Check for burned-out led
	Check for moisture inside the fixture
	Stability of the civil works of runway fixtures
Unscheduled	Check for water in base
	Electrical connections and insulation degree
	Leakage test
	Condition of all gaskets
	Check torque of mounting bolts after a month of their first installation
	Remove snow from around fixtures
	Check wires in saw kerfs

4.1.2 Snowplow Operations

Snowplow operators should exercise extra care not to strike the light fixtures with snowplow blades. After snow removal operations, inspect all light fixtures to locate and replace, if necessary, any damaged light assemblies.

Passes over the light rows should be made with a power broom only if practical. Whenever snowplows must traverse in-pavement light fixtures, they should be either travelling at less than 10 km/h or have the blades lifted clear of the fixtures. Recommended snow removal techniques are described in Airport Service Manual ICAO - Part 9 - Airport Maintenance Practices or FAA AC 150/5200-30.

4.2 Removing and opening the light unit from the base

4.2.1 Removing the fixture

- Remove the fixture from the base, after switching off, by unscrewing the six locking screws complete with washers.
- Raise the fixture by using the two lifting tools (P/N 332.4140 or 332.4230) inserted in the suitable slots provided on the dome. As an alternative, two screwdrivers can be used.
- Disconnect the fixture plug/s and grounding cable from those inside the shallow base.

4.2.2 Opening the fixture

- Unscrew the leak valve cap and push the valve central pin, in this way the light internal pressure is the same of the atmospheric pressure.
- Open the fixture by unscrewing the 6 locking screws TORX SFH M5x10 (1).

Every time the fixture is opened, all the seals must be replaced: use only original spare by Multi Electric Mfg., Inc..
Every time the fixture is opened, inspect the following parts and replace them if necessary:

- **prism, if it is dirty or damaged**
- **prism gasket, check the integrity**
- **cable lead with plug**

4.2.3 Closing the fixture

Every time the fixture is opened replace the following items with a new ones:

- 6 locking screws TORX SFH M5x10 (1);
- O-Rings between dome and lower cover (2) and (3);

Verify the correct position of the two O-Ring between dome and lower cover (2) and (3); mount the lower cover on the dome and fasten it by means the 6 screws TORX SFH M5x10. One drop of anaerobic adhesive lower type (e.g. LOXEAL 24-18) should be applied to the screws before installation; tightening torque is 22 in-lb [2.5 Nm].

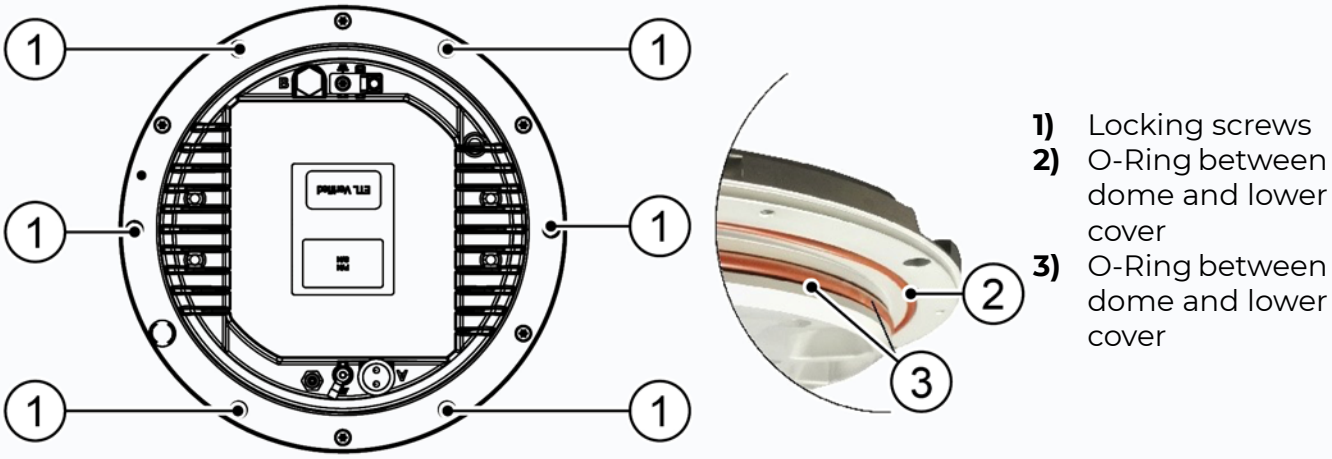

Figure 14 - Lower cover fixing screws

4.2.4 Leakage test

The assembly should be given a 1.38 kPa air pressure test. This can be done by connecting an external air pressure line to the valve (2) provided on the lower cover. Immerge the assembly under water, so air loss will be easily viewed if some part is damaged or assembling is wrong.

If there is no air loss then test is passed successfully.

Light unit is ready to be field installed.

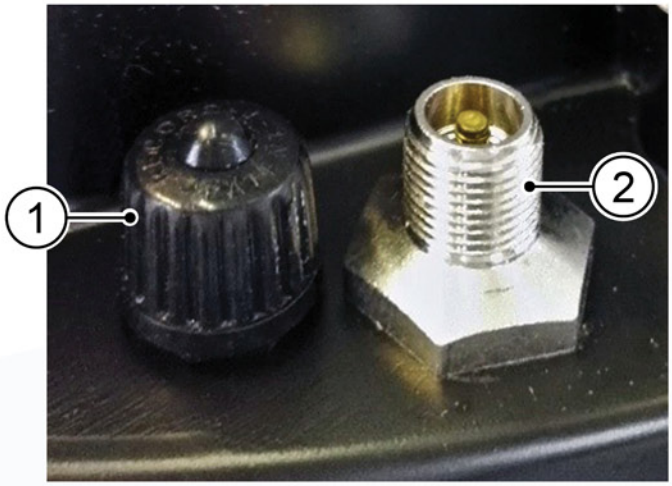

Figure 15 - Lower cover with pressure valve

4.2.5 Reinstalling the fixture

Every time the fixture is removed from the base replace the following items with a new ones making sure that are right placed in the relevant groove:

- the six special seal lock washers;
- O-Ring (1) around the dome;
- O-Ring (4) between fixture and shallow base;
- The fixture is ready to be field installed.

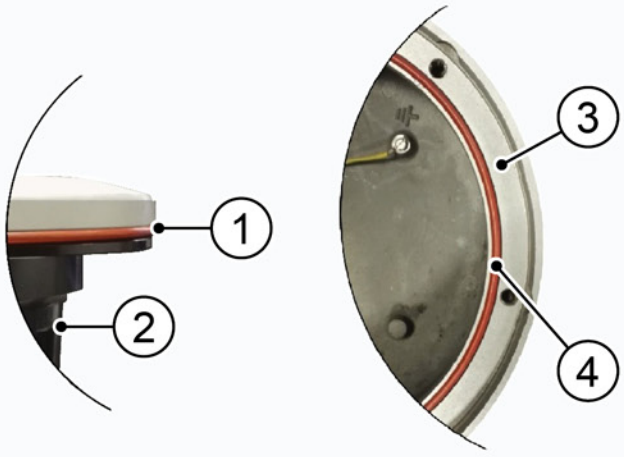

1) O-Ring around the dome
2) Lower cover
3) 12” shallow base
4) O-Ring between fixture and 12” shallow base

Figure 16 - Fixture gasket

4.3 Prism cleaning

4.3.1 Prism outside cleaning

Removing the fixture is not necessary to clean the outer surface of the prisms, and if already removed is not necessary to open it. Clean the prisms surface with non abrasive glass product.

4.3.2 Prism inside cleaning

Normally the cleaning of the prism inside surfaces is not necessary because fixture is watertight. Whenever it is necessary, remember the following rules.

Remove the fixture from the base and open it following instructions of *"Removing and Opening the Light Unit From the Base"* and proceed as follows:

- Clean the prisms surfaces (1) with non abrasive glass product.
- Dry them carefully.
- Reassembly the light unit following instructions of paragraph *"Closing the Fixture"*, *"Leakage Test"* and *"Reinstalling the fixture"*.



Figure 17 - Prism cleaning

4.4 Prism replacement

If the prism is damaged it must be replaced as described below.
It is highly recommended to do a complete overhaul of the fixture. Contact MULTI ELECTRIC MFG., INC. for any suggestion.

4.4.1 Removing the prism

Remove the fixture from the base and open it following instructions of "*Removing and Opening the Light Unit From the Base*".

- Clean out possible pieces of the old prism and all accumulated debris from the inside.
- Unscrew the three screws HSCS M5x12 (6) and remove the mounting plate (5).
- Remove the old prism (3) and the gasket (2), carefully clean the prism seat (1) by scraping and taking care not to damage the relevant walls.

4.4.2 Installing the New Prism

- Place a new gasket (2) in the prism cavity (1) on the dome, then position and press by hand the prism (3) in the relevant seat.
- Place a new gasket (4) in the back side of the prism.
- Fasten the mounting plate (5) with the three relevant screws HSCS M5x12 (6); tightening torque is 2.5 Nm.
- Inspect all components inside the fixture for damages or signs of corrosion. Replace all necessary components.

Close the light fixture following instructions of paragraph *"Closing the Fixture"*, *"Leakage Test"* and *"Reinstalling the fixture"*.

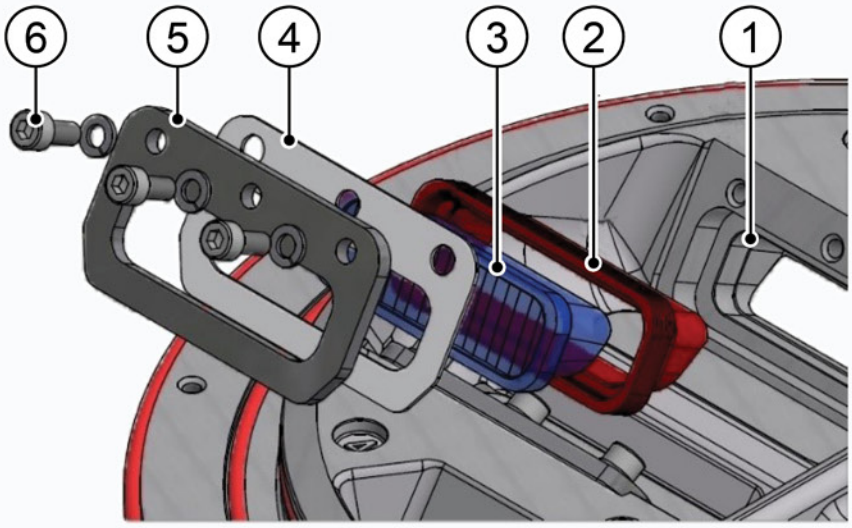

Figure 18 - Prism replacement

4.5 Led module replacement

Remove the fixture from the base and open it following instructions of *"Removing and Opening the Light Unit From the Base"* and proceed as follow:

- Disconnect the power supply connector (4) from the LED module (3).
- Remove the relevant reflector (1) from the mounting plate unscrewing the two screw HSCS M3x12.
- Remove the LED module (3) from the mounting plate unscrewing the two screw HSBS M3x12.
- Replace the LED module (3) with a new one. Check that the thermal interface (5) is placed under the LED module (3) and right-positioned.
- Place the relevant reflector (1) and check that the Kapton insulating sheet (2) is placed over the LED board is lying down and right-positioned.
- Fasten the LED module and the relevant reflector with a tightening torque of 0.6 Nm.
- Reconnect the power supply connector (4) to the LED module (3).

Reassembly the fixture following instructions of paragraph *"Closing the Fixture"*, *"Leakage Test"* and *"Reinstalling the fixture"*.

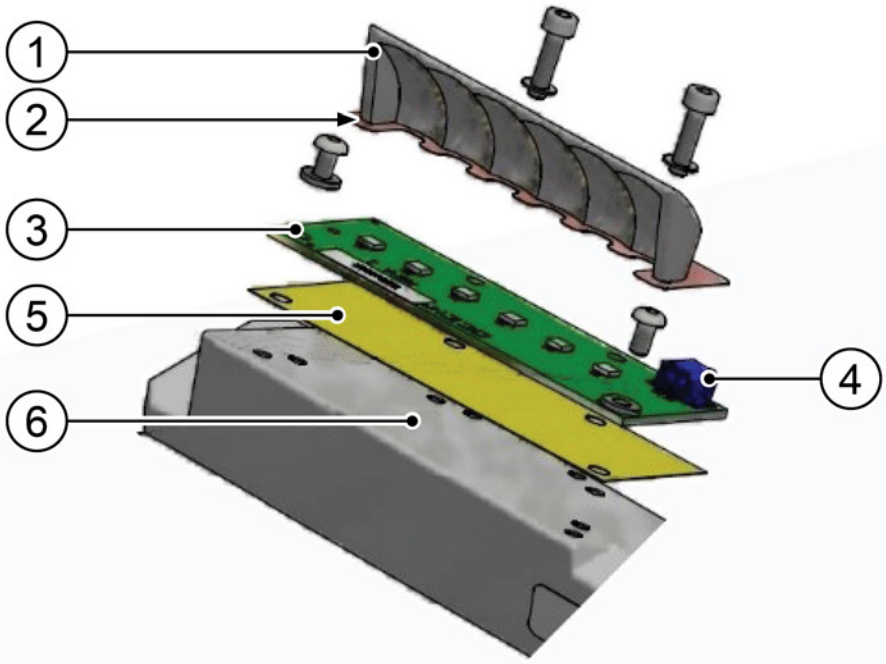

Figure 19 - LED module replacement

4.6 Electronics replacement

Remove the fixture from the base and open it following instructions of "*Removing and Opening the Light Unit From the Base*" and proceed as follow:

- Disconnect the power supply connector(s) from the LED module(s).
- Replace the entire lower cover with a new one complete with electronic section.
- Reconnect the power supply connector(s) to the LED module(s).

Reassembly the fixture following instructions of paragraph "*Closing the Fixture*", "*Leakage Test*" and "*Reinstalling the fixture*".

4.7 Arctic kit replacement

Remove the fixture from the base and open it following instructions of "*Removing and Opening the Light Unit From the Base*" and proceed as follow.

4.7.1 Thermostat

- Disconnect the thermostat from the cable lead with plug and from the PCB.
- Unscrew the two screws HSCS M3x8.
- Unsolder the heater cable from the thermostat.
- Take a new thermostat and solder the heater cable on the new thermostat terminals.
- Protect the soldered joint from moisture with a piece of suitable heat shrink tubing.
- Tighten the two screws with tightening torque 0.6 Nm.

4.7.2 Heater

- Unsolder the heater cable from the thermostat.
- Unscrew the three screws HSCS M3x8 which fasten the heater.
- Solder the new heater cable on the thermostat terminals.
- Protect the soldered joint from moisture with a piece of suitable heat shrink tubing.
- Clean the heater dome area.
- Apply silicon thermal paste (like Wacker P12) under the new heater.
- Position the heater on the dome and tighten the three screws with plastic washer; tightening torque 0.6 Nm.

Reassembly the fixture following instructions of paragraph "*Closing the Fixture*", "*Leakage Test*" and "*Reinstalling the fixture*".

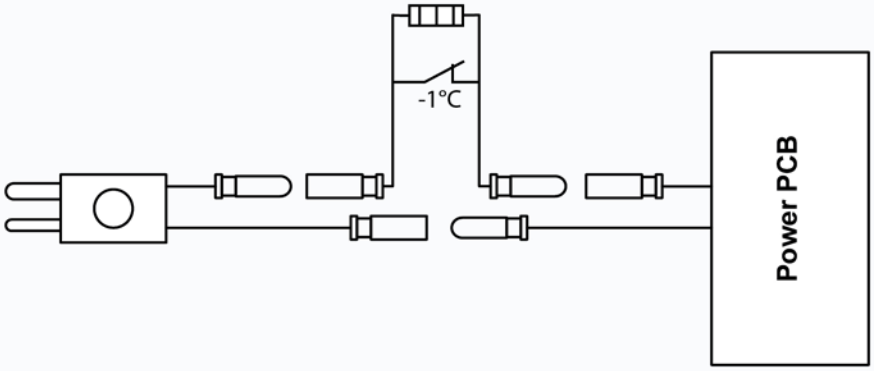

Figure 20 - Wiring diagram for the heaters

4.8 Gaskets

Every time a fixture is opened each O-Ring must be examined as described below and replaced if necessary.

4.8.1 Gasket examination

Any O-Ring that is stretched, torn, has a permanent set or some other defect, which would prevent it from obtaining a water-tight seal must be replaced with a new O-Ring.

Remove the fixture from the base and open it following instructions of "*Removing and Opening the Light Unit From the Base*".

Light assembly is equipped with the following gaskets:

- Two O-Ring between dome and lower cover (1) and (2).
- O-Ring around the dome (3).
- O-Ring between fixture and 12" shallow base (4).
- Prism gasket mounted between prism and dome (5).

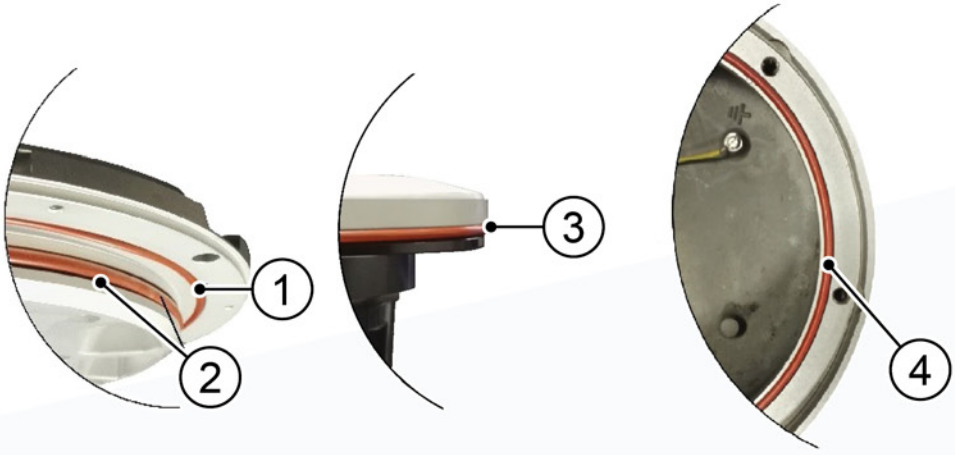

Figure 21 - Fixture gasket

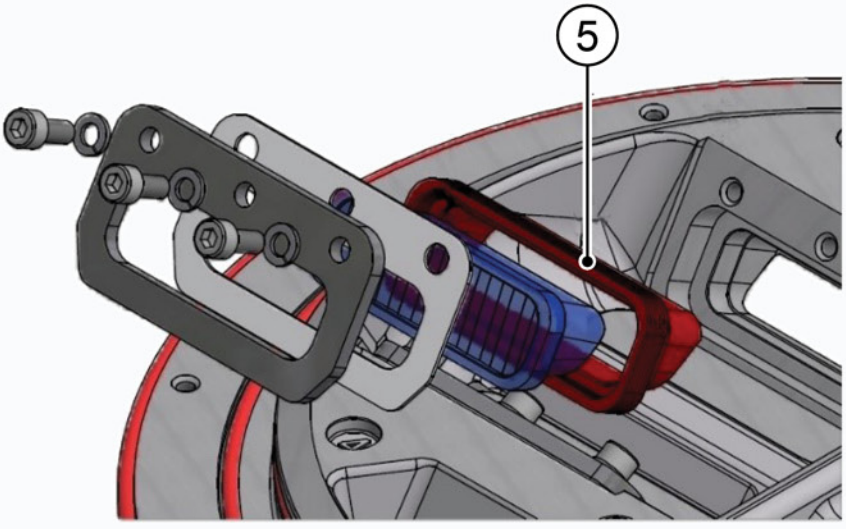

Figure 22 - Prism replacement

4.8.2 O-Ring replacement

Remove the old O-Ring from the groove and clean the flange mating surfaces and the groove, scraping carefully. Take care not to damage the mating surface and the bottom and sides of the groove. Position it in the centre of its groove and push it inside.

Make sure that the proper O-Ring is re-inserted into the groove.

The seat of an O-Ring gasket is dimensioned to allow the proper positioning when compressed between the mating surfaces.
Screws properly tightened are important in obtaining a complete seal.

Before installing the fixture in the field, carry out a leak test.
If a leak is detected during the leak test, action must be taken to solve the problem.

4.8.3 Tightening torque

Lower cover **TORX SFH M5x10**	2.5 Nm
Fixture locking screw	35 Nm (for shallow base) 25 Nm (for L-868 B base)

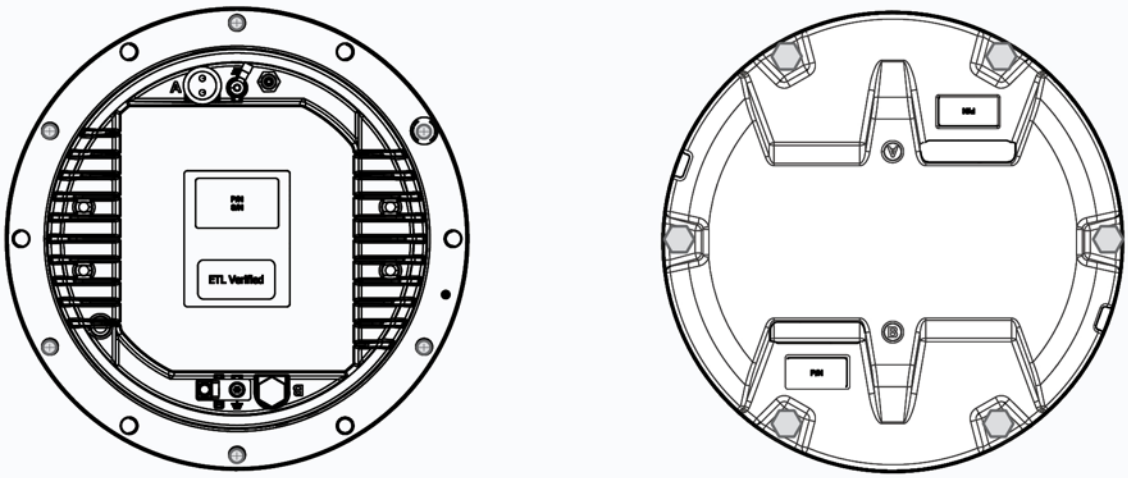

Figure 23 - Tightening elements

4.9 Cable lead with plug

The assembly of the power supply cable must be performed only by professional staff, in compliance with all the safety requirements of the laws and regulations in force in the country of use.
Carry out operations only if all the elements have been properly detached from field and energy sources. Never operate on potentially active components.

Remove the fixture from the base and open it following instructions of "*Removing and Opening the Light Unit From the Base*".

4.9.1 Removing the cable lead with plug

- Inside the lower cover, disconnect the pair of wires from the electronics by cutting the cables.
- Unscrew the gland.
- Pull out the cable lead with gland gasket.

4.9.2 Installing the new cable lead with plug

- Insert the gland nut (2) on the new unipolar cable (1) so that the length (L) of the cable outside the fixture is correct (depending on the configuration).
- Splice the ends of the cables (3) for a length of approx. 7 mm.
- Tighten the gland nut (2) at 6 Nm.
- Restore the electrical connections by faston terminals.

Close the light fixture following instructions of paragraph "*Closing the Fixture*", "*Leakage Test*" and "*Reinstalling the fixture*".

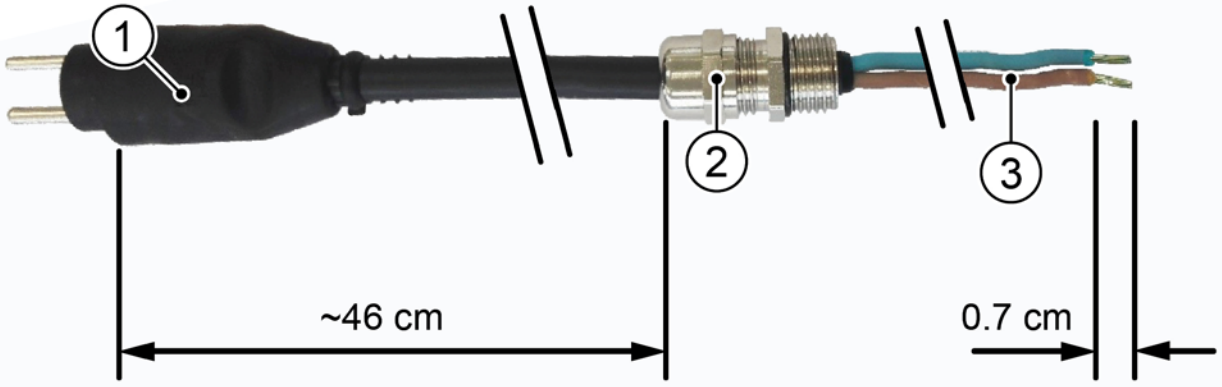

Figure 24 - Cable lead with plug

4.10 Pressure valve

If a leakage is found through the pressure valve during an air pressure test, check carefully where the leakage happens.
If the leakage is between the valve (1) and the lower cover, check the tightening of the valve body to the lower cover from the outside of the fixture.

In case the pressure valve needs replacing operate as follows, considering the fixture already opened following instructions of "*Removing and Opening the Light Unit From the Base*".

- Unscrew the valve body with gasket from the outside of the lower cover by clamping the hexagonal end section of the valve body (1).
- Screw the new valve on the lower cover; tightening torque is 0.35 Nm.
- Check the valve core (2) is tightened to the valve body (1) and then screw its cap (3).

Reassembly the light unit following instructions of paragraph "*Closing the Fixture*", "*Leakage Test*" and "*Reinstalling the fixture*".

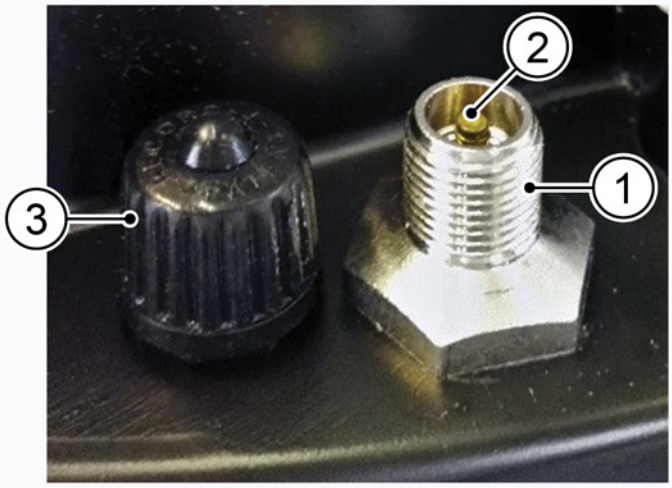

Figure 25 - Lower cover with pressure valve

4.11 Cleaning

Service life depends upon the entire assembly being waterproof. All surfaces must be clean, dry and free of all foreign matter if the light fixture is to operate for an extended period without requiring maintenance.

4.12 Monitoring

The fixtures can be provided with the option of monitoring. This device allows to show at the constant current regulator as if the fixture circuit was open when a LED burns out. The fixture thus acts as a traditional lamp fixture.

When the fixture has a bad operation, the internal monitoring device disconnects definitively the fixture from the series circuit; after this operation to restore the normal operation of the fixture it's necessary to replace the LED board and unlock the monitoring device.

For this operation it is necessary to follow these steps:

- Remove the fixture from the base and open it following instructions of "*Removing and Opening the Light Unit From the Base*"
- Replace the LED module following instructions of "*LED Module Replacement*"
- Restore the condition of proper functioning of the monitoring device as shown in figure.

Reassembly the fixture following instructions of paragraph "*Closing the Fixture*", "*Leakage Test*" and "*Reinstalling the fixture*".

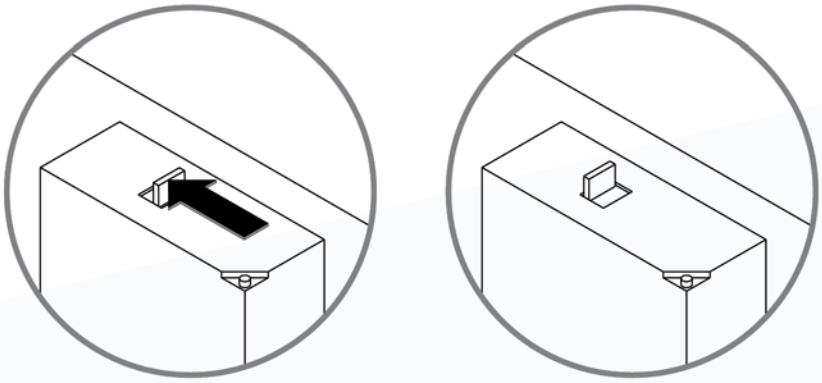

Figure 26 - Restoring the monitoring device

5 TROUBLESHOOTING

Problem	Possible cause	Solution
Distorted light beam output	Broken or damaged prism	Replace prism
	Wrong prism installed	Check parts list and install the correct prism
Weak light output	Primary loop with partial short circuit	Check cable assembly
	Defect in the isolation transformer	Replace transformer
	Dirty prism or dome	Clean the light fixture
	One LED of the luminous source damaged in short circuit (only without the monitoring option)	Replace the LEDs board
	Wrong power PCB installed	Check parts list and install the correct PCB
Luminous source not working	LEDs defective	Replace the LEDs board
	Power PCB defective	Replace the Power PCB
	Moisture inside the fixture	Execute leakage test and replace damaged components. Clean and dry the inside area of the fixture
	No connection of primary circuit	Check transformer output current with A-meter
	Defective isolation transformer or secondary wiring	Check power line between the light fixture and the transformer, including connectors
	Monitoring device locked (only if this option)	Unlocked monitoring device
Water or moisture inside the fixture	Prism gasket, O-rings between dome and lower cover	Replace all gasket and execute leakage test
	Pinched fixture power cables	Replace fixture leads

Page left intentionally blank

6 SPARE PARTS

Code	Description
RISL20001	*Kit Mounting gaskets*
RISL10003	Kit Prism with gasket
RISL10005	Kit Reflector with screws
RISL20006	Arctic Kit for unidirectional dome
RISL20009	Unidirectional dome
RISL20010	Unidirectional dome with Arctic Kit housing
RISL20024	Module LED F186 RED
RISL20034	Lower cover 12” 1I/1O with monitoring
RISL20035	Lower cover 12” 1I/1O without monitoring
RISLX0002	Pressure valve
RISLX0003	Grease for O-Ring gaskets (400 gr)
RISLX0004	Screws and O-Ring gasket for fixture fixing on base
RISLX0006	Unipolar power supply cable lead with plug L=0.6 m
RISLX0007	Anaerobic adhesive for fillets
RISLX0008	L-823 cable with gland nut for shallow bases

Page left intentionally blank

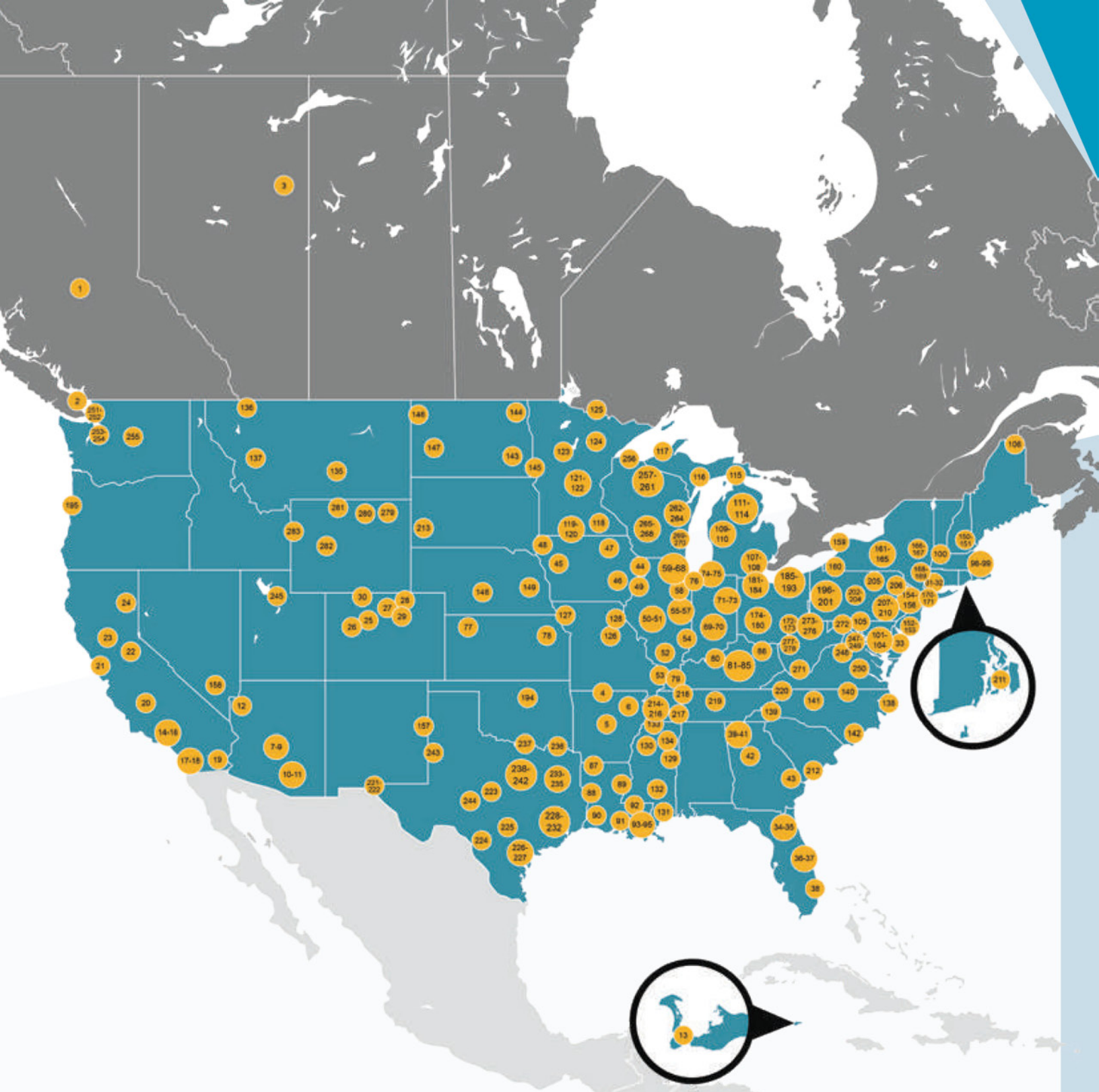

References in North America

MULTI ELECTRIC
OCEM AIRFIELD

YOUR MOST TRUSTED
AIRFIELD SOLUTION EXPERT

100 YEARS OF
AGL EXPERTISE



MULTI ELECTRIC

OCEM AIRFIELD

Multi Electric Mfg., Inc.
10501 Franklin Ave - Suite 400
Franklin Park, IL 60131 (USA)

Email: sales@multielectric.com
Phone: +1 773-722-1900
Fax: +1 773-722-5694

We develop **turnkey cross-cutting projects** in close synergy with:

OCEM AirfieldTechnology

A company of ARETÈ COCCHI TECHNOLOGY

